ICC/NSSA Standards Preview

Chapter 8 - Testing

by

Ernst W. Kiesling, P.E., Ph.D.

Professor of Civil Engineering

Texas Tech University

and

Executive Director

National Storm Shelter Association (NSSA)

presented to

Florida Governor's Hurricane Conference

May 16, 2007

Fundamental Design Criteria

Design Wind Speeds -- Tornadoes

Same as FEMA 361

Zone I	130 mph
Zone II	160 mph
Zone III	200 mph
Zone IV	250 mph

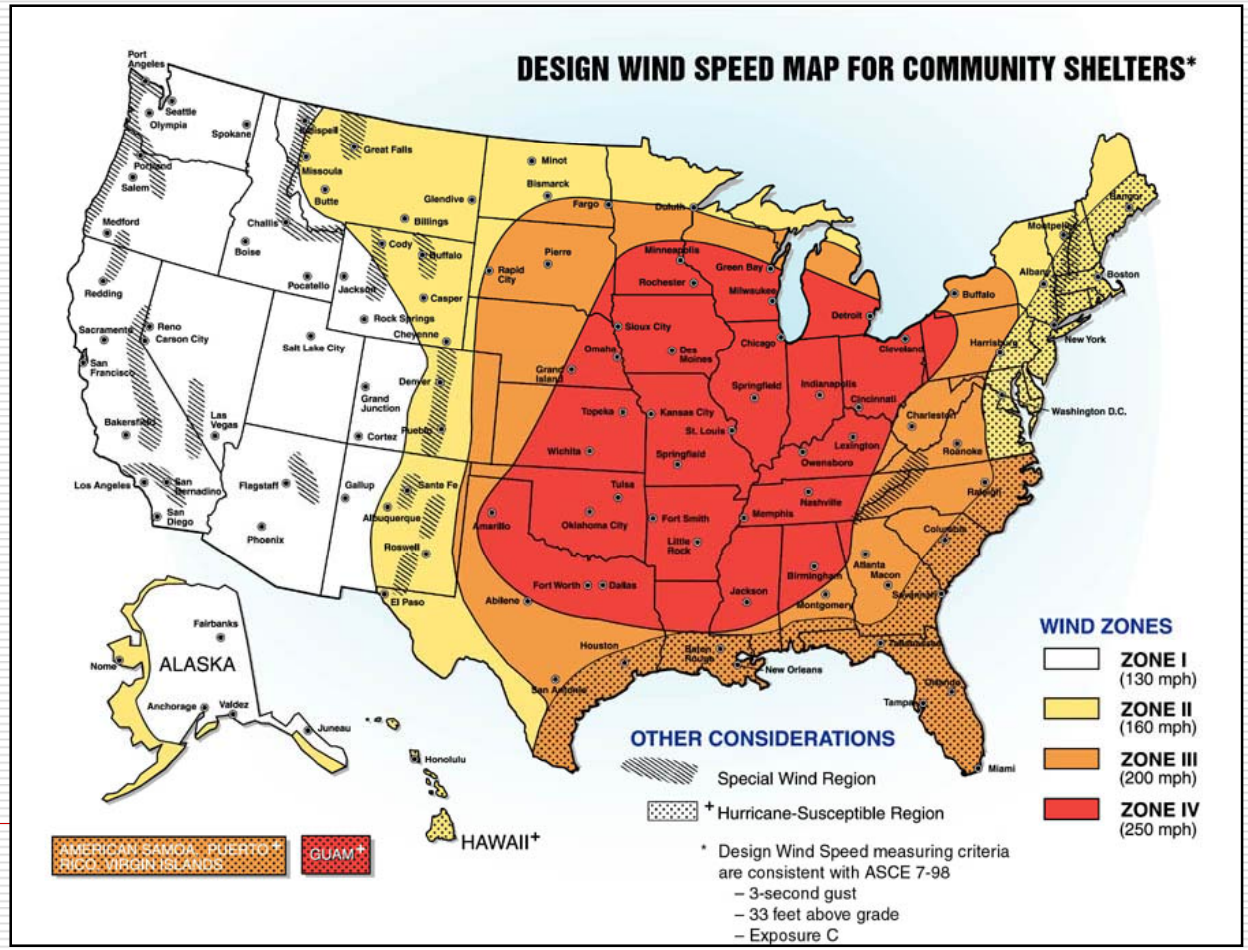

Fundamental Design Criteria

Design Wind Speeds – **Hurricanes**

Using 10,000-year MRI (Approximately ASCE-7 plus 50 mph)

Results in wind speed zones with design wind speeds from 160 mph to 225 mph

Debris Impact Criteria
Tornadoes

15 lb sawn lumber 2 x 4 board traveling at:

Zone	Design Wind Speed (mph)	Type Surface	Missile Design Speed (mph)
I	130	Vertical	80
		Horizontal	53
II	160	Vertical	84
		Horizontal	56
III	200	Vertical	90
		Horizontal	60
IV	250	Vertical	100
		Horizontal	67

Debris Impact Criteria
Hurricanes

9 lb sawn lumber 2 x 4 traveling at:

0.4 times design wind speed horizontal travel

0.1 times design wind speed vertical travel

Pressure Criteria

ASCE-7 Method 2 modified for external pressures

For tornado shelters:

Internal pressure coefficient = 0.18 for vented, enclosed structures

= 0.55 for partially enclosed or inadequately vented structures

For hurricane shelters: No additional internal pressure required

Enclosure classification determined with largest door or window on a wall that receives positive external pressure assumed open.

Test Specimen

- Testing of components consisting of wall, roof, door, or window assemblies shall be allowed in lieu of testing entire shelters

- Operable doors and windows shall be tested for the conditions of swing and latching as specified for use of the end product.

Test Specimen

- **Except where failure of framing members may control the impact performance, wall and roof sections subjected to debris impact testing shall be a minimum of 4-feet (1219mm) wide by 4-feet (1219 mm) high unless dimensions of the actual assembly are less than these dimensions.**

- **Wall and roof sections subjected to pressure testing and wall sections where impact resistance may be controlled by framing members shall be a minimum of 4-feet (1219 mm) wide and the full length of the span of the wall section from support to support.**

Number of Test Specimens

- Where both pressure and impact tests are required, testing of a single specimen subjected separately to each effect or two specimens, one subject to each load effect, shall be permitted.

Missile Impact Procedure

- Test specimens shall be impact tested with test missiles of size and speed as specified in section 305 of this standard. Impact procedure shall be performed as detailed in ASTM E 1886.

Apparatus and Callibration

- The missile speed shall be measured by a device light gate with a known separation using an interval timing system capable of measuring the missile velocity to within ±1 ft/sec (0.305 m/s).
- The missile test speed tolerance is four mph above and zero mph below the prescribed missile speed.

Impact Locations* and *Number of Impacts

Considerable specificity where to impact specimens and how many times, e.g.,

- **All door assemblies and other Entry/Egress Systems shall be impacted within 6” of an interface hinge joint, within 6” of an upper latch point and within 6” of center primary latches or operators as shown in Figure 804.9.5-1.**
- **For double door assemblies, a single door leaf shall receive three impacts as shown in Figure 804.9.5-2 plus an additional impact on a center meeting point or mullion.**

Impact Locations* and *Number of Impacts

Specifics given for:

- Panel or *Framed Walls/Roofs*
- *Solid Wall/Roof Sections of Concrete or Other Materials*
- *Masonry Unit Walls/Roofs*
- *Windows and Other Glazed Openings*
- *Doors and Other Entry/Egress Systems*
- *Shutters or Other Impact Protection Systems*
- *Alcove/Baffled Entry Systems*

Alcove/Baffled Entry Systems

- Systems for which no door or testing is required

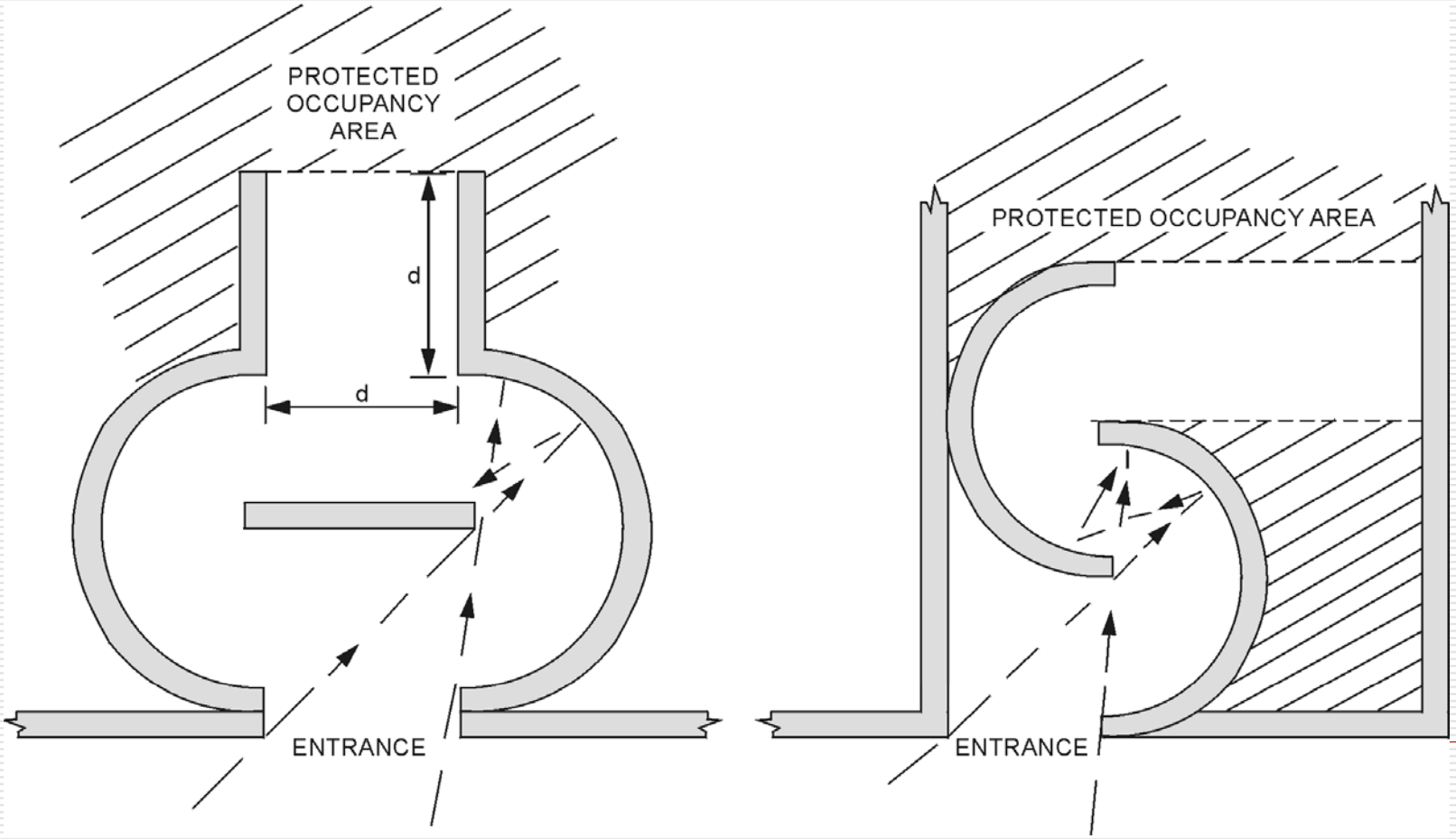

Alcove/Baffled Entry Systems

<u>Door subjected to Rebound Impact</u>

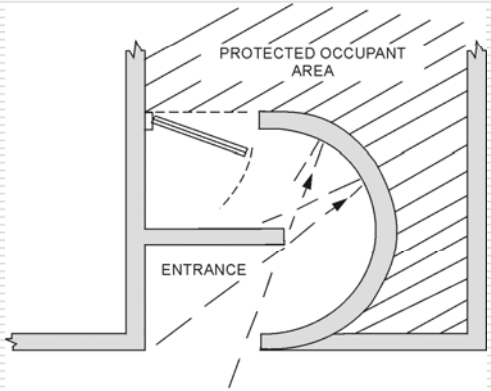

The door shall meet the wind load requirements of Section 304 and the debris impact requirements of Section 305 except that the missile shall be, at a minimum, a 9-lb sawn lumber 2x4 traveling at 50 ft/sec

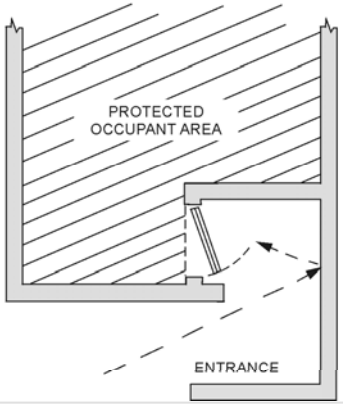

Alcove/Baffled Entry Systems

Door is Subjected to First Impact

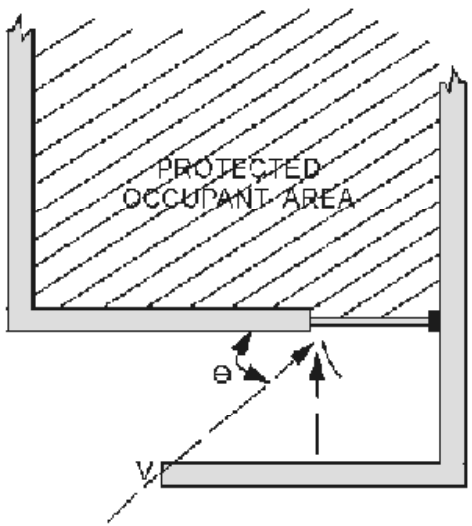

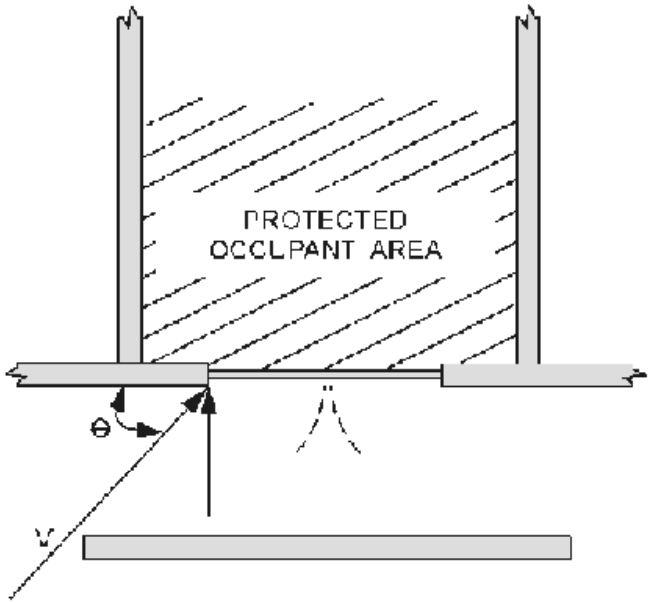

The minimum debris impact shall be an impact perpendicular to the door of a 9 lb sawn lumber 2 x 4 traveling at 50 fps (34 mph).

Pass/Fail Criteria

- Perforation: Any perforation constitutes failure
- Dislodgment and Disengagement: Must pass witness screen test
- Spall: Must pass witness screen test

Pressure Testing

- Apparatus: Defined by ASTM E-330
- Cyclic Pressure Testing: Loading sequence detailed by ASTM E-1886

Pressure Testing

Door Assemblies Without Glazing

Tornado Shelters

- Static pressure tested away from door stops to a pressure at least 1.2 times shelter design pressure
- Pressure tests separate from missile impact tests

Pressure Testing

Door Assemblies Without Glazing

Hurricane Shelters

- Static pressure tested away from door stops to a pressure at least 1.5 times shelter design pressure

- Cyclic pressure testing not required following such pressure tests

Pressure Testing

Door Assemblies With Glazing, Sidelights, or Transoms

- For size less than 12” x 12”, additional sample shall be impacted in the center of the glazed opening <u>and</u> cyclic pressure tested
- Glazed openings with dimension greater than 12” shall be tested as a window

Pressure Testing

Opening Protective Devices

- Tested for pressure if withstanding pressure is critical to function when installed
- Non-operable, permanently affixed shields or cowlings only for debris intrusion need not be pressure tested

Pressure Testing

Opening Protective Devices

Tornado Shelters

(Withstanding wind pressure critical to function)

- Static pressure tested to a pressure at least 1.2 times shelter design pressure
- Pressure tests are permitted to be conducted separately from debris impact tests

Pressure Testing

Opening Protective Devices

Hurricane Shelters

(Withstanding wind pressure critical to function)

- Static pressure tested following ASTM E 330, followed by any required debris impact tests
  - Exception: Those with jamb or stop need be tested only with pressure away from the stop
- Cyclic pressure tests following impacts conducted following procedures of ASTM 1886

Pressure Testing

Baffled Entry Systems

Any element whose ability to resist wind induced pressure is critical to function shall meet design wind loads or be tested.